DEPARTMENT OF SOCIAL WELFARE AND DEVELOPMENT FIELD OFFICE V

Regional Center Site, Rawis, Legazpi City, Albay

REQUEST FOR QUOTATION

Company Name:		P.R. No.	NF 2504-0271
Company Address:		Date:	April 10, 2025
Contact No.:		Mode of Procurement:	Small Value Procurement (53.9)
PhilGEPS Certificate No.:		TIN:	

*Please quote your lowest government price for the following item(s) specified below. Check/tick the "**COMPLY**" box if bidder complies with the specifications. A quotation containing unchecked/unticked "**COMPLY**" boxes would be automatically rated as "**FAILED**".*

ITEM NO.	QTY.	UNIT	ITEM DESCRIPTION AND SPECIFICATIONS	Kindly CHECK to signify compliance to the specs.	UNIT COST	TOTAL COST
			FABRICATION AND DELIVERY OF CUSTOMIZED PRINTER STAND			
	12	piece	PRINTER STAND	☐ Comply		
			Specifications:			
			Dimension (L-800mm, W-800mm, H-600mm)	☐ Comply		
			With 4-wheel castor heavy duty with lock	☐ Comply		
			With heavy duty hinge pull cabinet handle	☐ Comply		
			With magnetic latch and concealed cabinet hinge	☐ Comply		
			Made of marine plywood on light gray ducco finish	☐ Comply		
			Please see attached measurement for customized printer stand and sample picture			
			Page 1 of 1			
			Approved Budget for the Contract: ***PHP 120,000.00***			

ana

IMPORTANT REMINDERS:

1. Price quotation/s must be valid for a period of 30 days from the date of submission.
2. **DELIVERY PERIOD: 30 calendar days from receipt of PO**
3. **PLACE OF DELIVERY: DSWD FO V, Rawis, Legazpi City.**
4. **The project shall be AWARDED:** ☑ (a) as one contract ☐ (b) separate contract per lot ☐ (c) separate contract per item
5. TERM OF PAYMENT: **CHARGED ACCOUNT**, unless specified. 30-60 days from the receipt of Statement of Account / Billing.
6. LIQUIDATED DAMAGES: **One-Tenth Of One Percent (0.001) of the cost of the unperformed portion of the contract for every day of delay.** Once the cumulative amount of liquidated damages reaches ten percent (10%) of the amount of the contract, the DSWD FOV **may rescind or terminate the contract,** without prejudice to other courses of action and remedies available under the circumstances.
7. The Supplier/Contractor acknowledges and agreed that any acts falling under section 65 (Offenses and Penalties) and Section 69 (Imposition of Administrative Penalties and Blacklisting) of the Implementating Rules and Regulations (IRR) of Republic Act No. 9184 (Government Procurement Reform Act), as well as other relavant procurement laws and regulations, shall subject the Supplier/Contractor to blacklisting, administrative, civil, and/or criminal liabilities in accordance with applicable laws and regulations.
8. Required documents to submit:
   a. PhilGEPS Certification Number b. Valid Mayor's or Business Permit c. Latest Income Tax Return
9. As a condition for AWARD, you will be required to submit the following documents:
   a. Omnibus Sworn Statement b. _____
10. For any clarifications, you may contact the BAC Secretariat through **procurement.fo5@dswd.gov.ph or 0910-017-0818**
11. Submit your quotation duly signed by you or your duly authorized representative not later that the deadline on APR 16 2025 ; 11:00AM

KIMBERLEE G. LANUZA
AO II/Procurement Section Head

Signature Over Printed Name of Canvasser

Signature Over Printed Name of Bidder

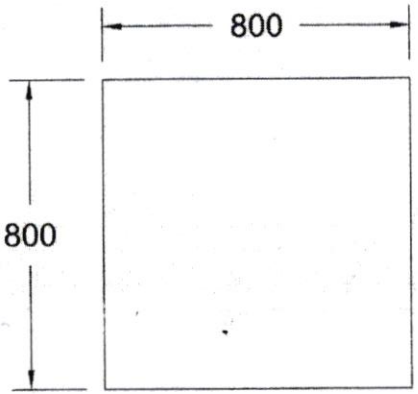

TOP VIEW
SCALE NTS

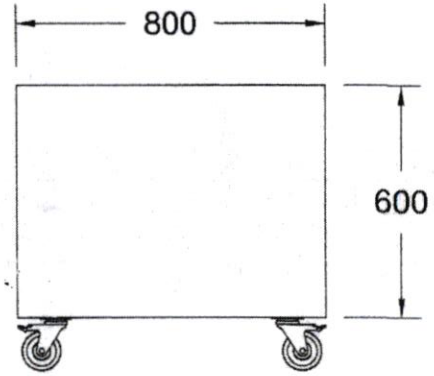

SIDE VIEW
SCALE NTS

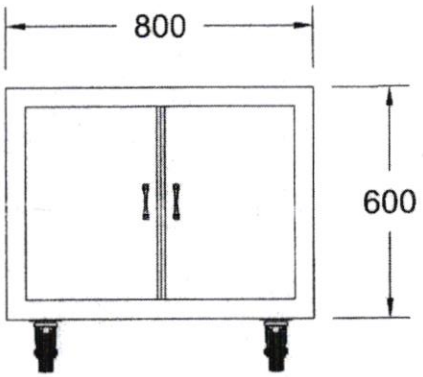

FRONT VIEW
SCALE NTS

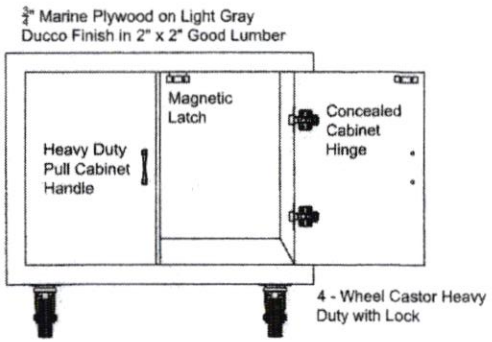

DETAILS
SCALE NTS

DSWD

ADMINISTRATIVE DIVISION/BGMS
FIELD OFFICE V
DSWD-AS-GF-058 | REV 02 | 07 OCT 2022

PROJECT NAME :

PANTAWID
PRINTER STAND

LOCATION :

DSWD FO V,
Magnolia St., Buraguis,
Legazpi City

SHEET CONTENT :

AS SHOWN

APPROVED BY

JINKY A. MANGAMPO
AO IV, OIC Chief-Administrative Division

CONFORMED BY

NORMAN S. LAURIO
Regional Director

CHECKED BY

ANALYN D. SIERRA
AO V, BGMS Head

PREPARED BY

ENGR. DAN PETER T. ALMONIA
PDO II-ELECTRICAL ENGINEER, BGMS

PROJECT/TA No:

DATE SUBMITTED:

DRAWING STATUS

DATE	DESCRIPTION/ REMARKS	BY

PLAN CATEG.	SHEET NUMBER	PAPER SIZE
A	1	A3